Queen Mary
University of London

EBU5376
Digital Signal Processing

Filters – Time-domain analysis

Module Organizer: Dr Yixuan Zou yixuan.zou@qmul.ac.uk

Outline

- Introduction
- Filter Representation
  - Block diagram
  - Difference equation
  - Transfer function
  - Impulse, step, frequency responses
- Filter Analysis – Step Response

Introduction - Digital vs Analog Filters

- There are two types of filters
  1. Analog filter
  2. Digital filter
- Both can be used for the same tasks
- **Analog filters** deal with continuous waves / analog signals
- **Digital filters** deal with discrete sequences / digital signals

Introduction - Digital vs Analog Filters

- **Analog filters** are realized by separate components, including the Inductance, Capacitance, Resistance and Transistor etc.
- **Digital filters** are realized by digital hardware (e.g. Adder, Multiplier and Delay modules), software program or the combination of both.

Introduction - Digital vs Analog Filters

- **Analog filters** are cheap, fast, and have a large dynamic range in both amplitude and frequency.
- **Digital filters** can achieve 1000x better performance than analog filters.

This makes a dramatic difference in how filtering problems are approached.

Introduction – Applications of Digital Filters

- Digital filters are designed for two main usages:
  1. Signal separation
  2. Signal restoration

- **Signal separation** is needed when a signal has been *contaminated with interference, noise, or other signals*.

- For example, imagine a device for measuring the electrical activity of a baby's heart while still in the womb. The raw signal will likely be corrupted by the breathing and heartbeat of the mother. A filter might be used to separate these signals so that they can be individually analyzed

Introduction – Applications of Digital Filters

- Digital filters are designed for two main usages:
  1. Signal separation
  2. Signal restoration

- **Signal restoration** is used when a signal has been *distorted* in some way.

- For example, an audio recording made with poor equipment may be filtered to better represent the sound as it actually occurred.

- Another example is the deblurring of an image acquired with an improperly focused lens, or a shaky camera.

Outline

- Introduction
- Filter Representation
  - Block diagram
  - Difference equation
  - Transfer function
  - Impulse, step, frequency responses
- Filter Analysis – Step Response

Filter Representation – Block Diagram

- **Block Diagrams** graphically depict the way that Digital Signal Processing operations are implemented. It comprises an assortment of fundamental processing symbols.

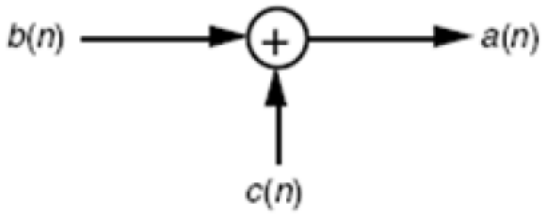

$$a[n] = b[n] + c[n]$$

Adder

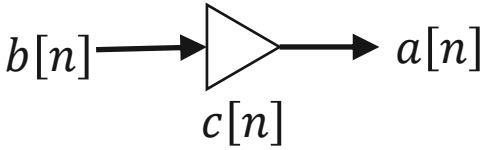

$$a[n] = b[n]c[n]$$

Multiplier

Filter Representation – Block Diagram

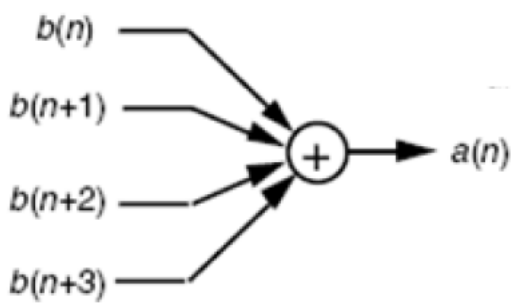

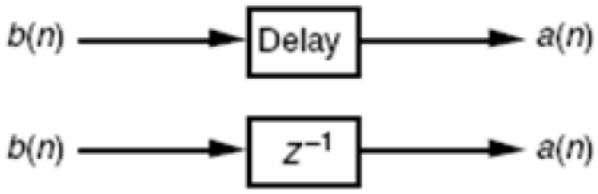

$$a[n] = b[n] + b[n+1] + b[n+2] + b[n+3]$$

Summation

$$a[n] = b[n-1]$$

Unit Delay

Filter Representation – Block Diagram

- Example 1: Combination of basic operations

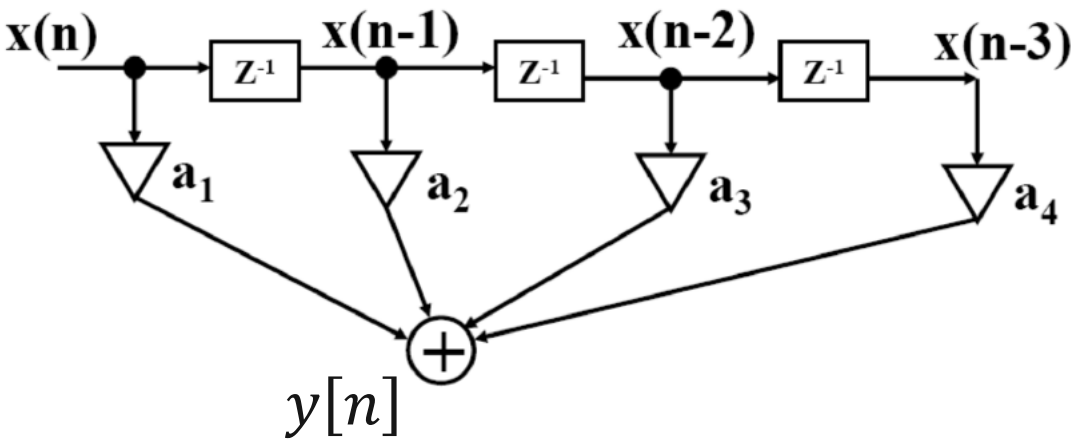

$$y[n] = a_1 x[n] + a_2 x[n-1] + a_3 x[n-2] + a_4 x[n-3]$$

Filter Representation – Block Diagram

- Example 2: Combination of basic operations

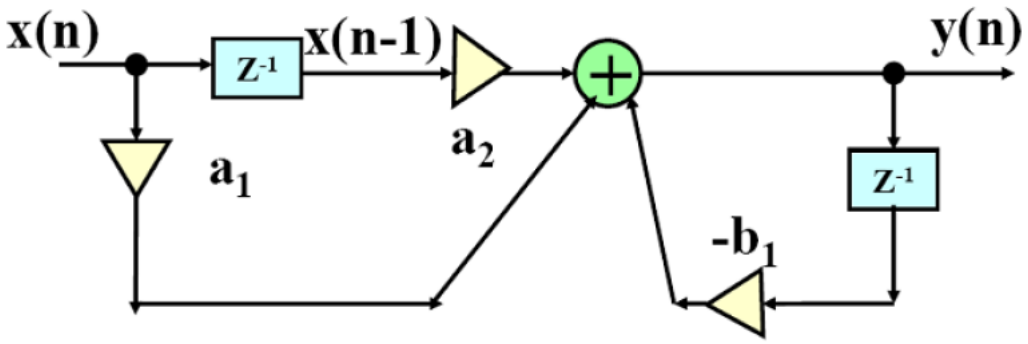

$$y[n] + b_1 y[n-1] = a_1 x[n] + a_2 x[n-1]$$

Filter Representation – Block Diagram

- Different block diagrams can lead to the same difference equation
- Here, we study a common way for realization of filters that matches the general form of difference equation:

$$y[n] = -a_1 y[n-1] - \cdots - a_N y[n-N]$$
$$+b_0 x[n] + b_1 x[n-1] + \cdots + b_M x[n-M]$$

Filter Representation – Block Diagram

$$y[n] = -a_1 y[n-1] - \cdots - a_N y[n-N]$$
$$+ b_0 x[n] + b_1 x[n-1] + \cdots + b_M x[n-M]$$

Input

Output

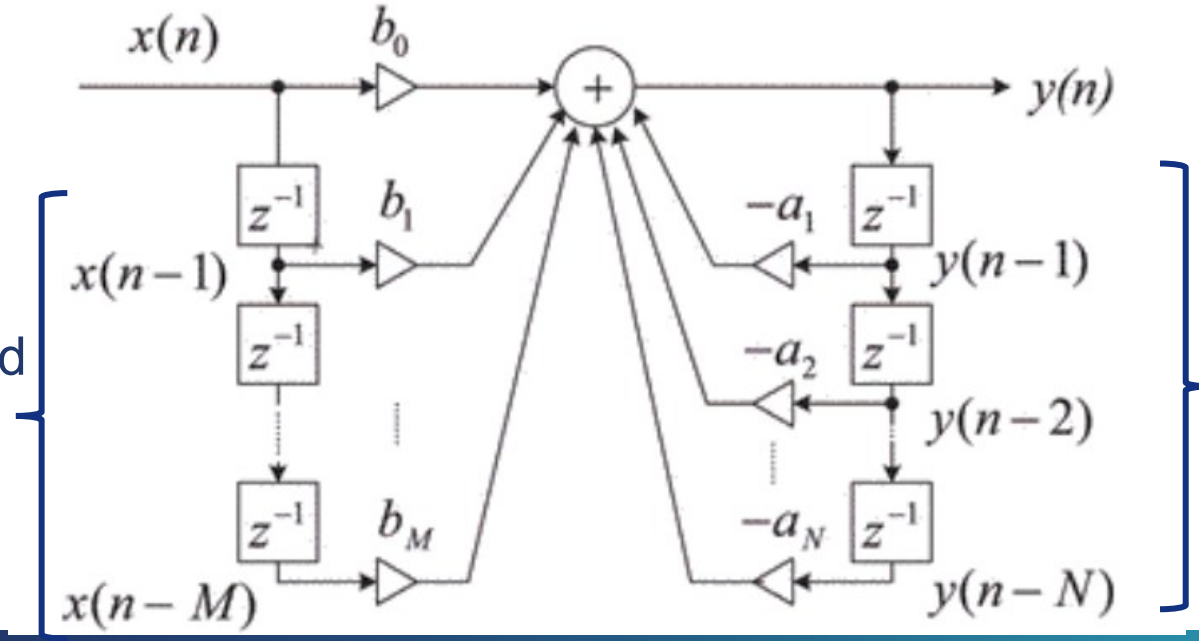

Feedforward

Feedback

This is known as the **direct form**

Filter Representation – Block Diagram

$$y[n] = -a_1 y[n-1] - a_2 y[n-2]$$
$$+b_0 x[n] + b_1 x[n-1] + b_2 x[n-2]$$

Input

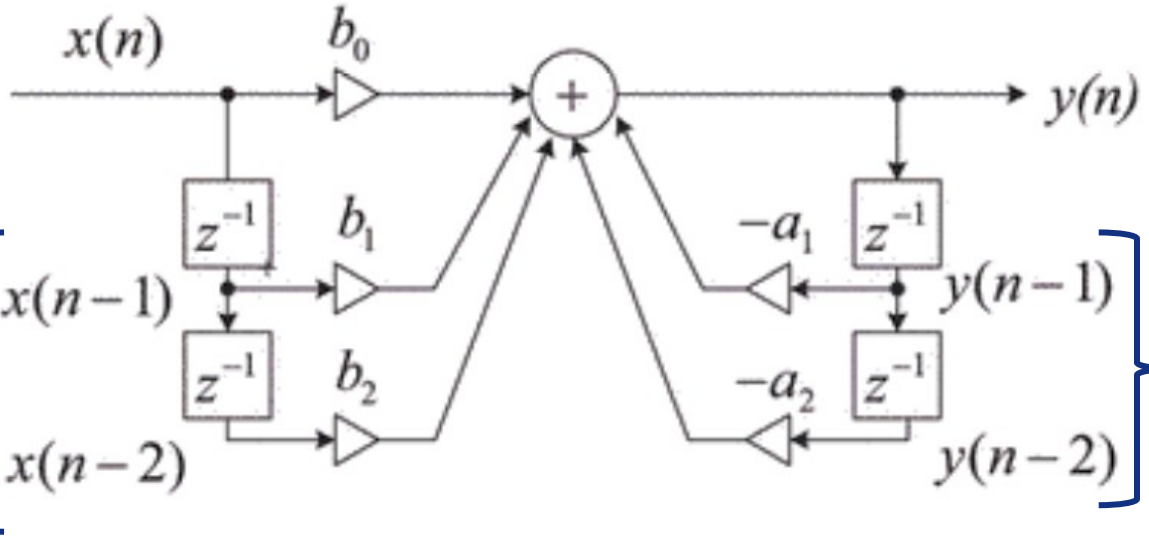

Output

Feedforward

Feedback

Filter Representation – Block Diagram

- <u>Example 3</u>: Using the direct form, draw the block diagram of

$$y[n] = a_1 x[n] + a_2 x[n-1] + a_3 x[n-2] + a_4 x[n-3]$$

Filter Representation – Block Diagram

- <u>Example 4</u>: Using the direct form, draw the block diagram of

$$y[n] + b_1 y[n-1] = a_1 x[n] + a_2 x[n-1]$$

Outline

- Introduction
- Filter Representation
  - Block diagram
  - Difference equation
  - Transfer function
  - Impulse, step, frequency responses
- Filter Analysis – Step Response

Filter Representation – LTI Filters

- In this module, filters are assumed to be causal Linear and Time-invariant (LTI) filters.
- Hence, they can be completely described by
  - ✓ Difference Equation
  - ✓ Transfer Function
  - ✓ Impulse Response
  - ✓ Step Response
  - ✓ Frequency Response

Previously we learned how to calculate them.

Now we learn how to classify filters using these characteristics

Filter Representation – Difference Equation

- The general form of a difference equation is:

$$y[n] + a_1 y[n-1] + \cdots + a_N y[n-N]$$
$$= b_0 x[n] + b_1 x[n-1] + b_M x[n-M]$$

- We use z-transform to solve the difference equation for a given input $x[n]$ and some initial conditions
  - When $x[n] = \delta[n]$, the solution is the *impulse response*
- Difference equation is required to plot the *block diagram*
- It serves as the **basis** for deriving all other forms of representations.

Filter Representation – Transfer Function

- The transfer function is defined as:

$$H(z) = \frac{Y(z)}{X(z)} = \boxed{\frac{\sum_{k=0}^{M} b_k z^{-k}}{\sum_{k=0}^{N} a_k z^{-k}}}$$

Coefficients in the difference equation

- It evaluates the ratio of the output and the input in the *frequency domain*
- It can be used to analyse the STABILITY of the filter, via the pole-zero plot

Filter Representation – MATLAB

$$y[n] + a_1 y[n-1] + \cdots + a_N y[n-N] = b_0 x[n] + b_1 x[n-1] + b_M x[n-M]$$

$$H(z) = \frac{Y(z)}{X(z)} = \frac{\sum_{k=0}^{M} b_k z^{-k}}{\sum_{k=0}^{N} a_k z^{-k}}$$

- In MATLAB, you can use the function 'filter(b,a,x)' to create custom filters. This function has 3 inputs:
  - 'b' is the coefficient of inputs, i.e., b_0, b_1, b_2 ...
  - 'a' is the coefficient of outputs, i.e., $a_0, a_1, a_2, \ldots$
  - 'x' is the input sequence that you want to filter
- More details on this function can be found in this link

Filter Representation – MATLAB

- <u>MATLAB Example</u>: Consider the following filter and input

$$x[n] = [0, 1, 1, 2], \qquad n = 0,1,2,3$$

$$y[n] = x[n] - 0.5x[n-1]$$

1. Without using MATLAB, calculate the output of this filter
2. Use MATLAB to check your answer to 1.

Filter Representation – MATLAB

- <u>MATLAB Example</u>: Consider the following filter and input

$$x[n] = [0, 1, 1, 2], \qquad n = 0,1,2,3$$

$$y[n] = x[n] - 0.5x[n-1]$$

1. Without using MATLAB, calculate the output of this filter
2. Use MATLAB to check your answer to 1.

<u>Answer to 1.</u>

$$y[0] = x[0] = 0; \;\; y[1] = x[1] - 0.5x[0] = 1;$$

$$y[2] = x[2] - 0.5x[1] = 0.5; \;\; y[3] = x[3] - 0.5x[2] = 1.5$$

$$y[n] = [0, 1, 0.5, 1.5]$$

Filter Representation – MATLAB

- MATAB Example: Consider the following filter and input

$$x[n] = [0, 1, 1, 2], \qquad n = 0,1,2,3$$

$$y[n] = x[n] - 0.5x[n-1]$$

1. Without using MATLAB, calculate the output of this filter
2. Use MATLAB to check your answer to 1.

```
b=[1, -0.5];     % coeff. of inputs
a=[1];           % coeff. of outputs
x=[0,1,1,2];     % input to the filter
y=filter(b,a,x) % calculate the output
```

```
y = 1×4
         0    1.0000    0.5000    1.5000
```

Same answer!

Outline

- Introduction
- Filter Representation
  - Block diagram
  - Difference equation
  - Transfer function
  - Impulse, step, frequency responses
- Filter Analysis – Step Response

Filter Representation - Responses

- **Filter response** helps to understand the difference between a filter's input signal and output signal
- Every LTI filter has
  - ✓ Impulse response
  - ✓ Step response
  - ✓ Frequency response

Time domain response
(related to *difference equation*)

Frequency domain response
(related to *transfer function*)

Filter Representation - Responses

Time-domain response

- describes when something occurs and what the amplitude of the occurrence is.
- Each sample contains information that is interpretable without reference to any other sample.

Frequency-domain response

- describes the periodic motion produced by the system.
- A single sample, in itself, contains no information about the periodic motion

Filter Representation - Responses

- Each of these responses contains complete information about the filter, but in a different form
- If one of the three is specified, the other two are fixed and can be directly calculated.
- All three of these representations are important, because they describe how the filter will react under different circumstances.

Filter Representation – Impulse Response

Impulse Response

- The most straightforward way to implement a digital filter is by convolving the input signal with the digital filter's impulse response.
- All possible LTI filters can be made in this manner
- Obtained as the solution to the difference equation when the input is $x[n] = \delta[n]$

Filter Representation – Impulse Response

Impulse Response

- Based on the impulse responses, DSP systems can be classified into two categories:
  1. **FIR filters** (Finite Impulse Response) are characterized by a finite number of non-zero terms in the impulse response. They are typically implemented using convolution.
  2. **IIR filters** (Infinite Impulse Response) have an impulse response that is non-zero over an infinite length of time and are typically implemented using recursive equations.

Filter Representation – Step Response

Step Response

- Step response shows how the filter responds to a sudden change in input. For instance, when its inputs change from zero to one in a very short time.
- Obtained as the solution to the difference equation when the input is $x[n] = u[n]$
- There are three main parameters of step response
  1. *Settling Time*
  2. *Overshoot*
  3. *Phase Linearity*

Outline

- Introduction
- Filter Representation
  - Block diagram
  - Difference equation
  - Transfer function
  - Impulse, step, frequency responses
- Filter Analysis – Step Response

Filter Analysis – Step Response

Step Response

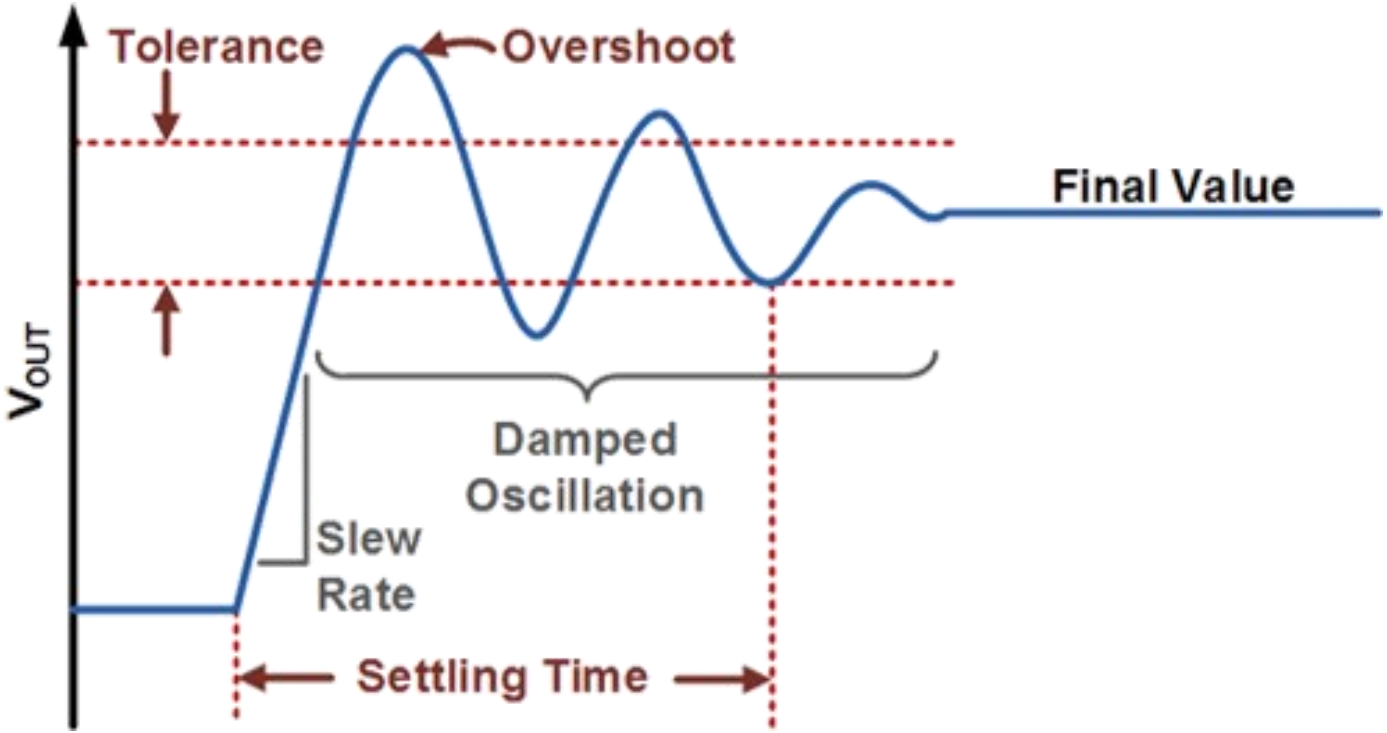

Filter Analysis – Step Response

Step Response Analysis – Settling Time

- To distinguish events in a signal, the duration of the step response must be shorter than the spacing of the events.
- This dictates that the step response should be as ‘fast’ as possible.
- The most common way to specify the settling time is the time required for the response curve to reach and stay within a range of certain percentage (usually 5% or 2%) of the final value

Filter Analysis – Step Response

Step Response Analysis – Settling Time

POOR

GOOD

Filter Analysis – Step Response

Step Response Analysis – Settling Time

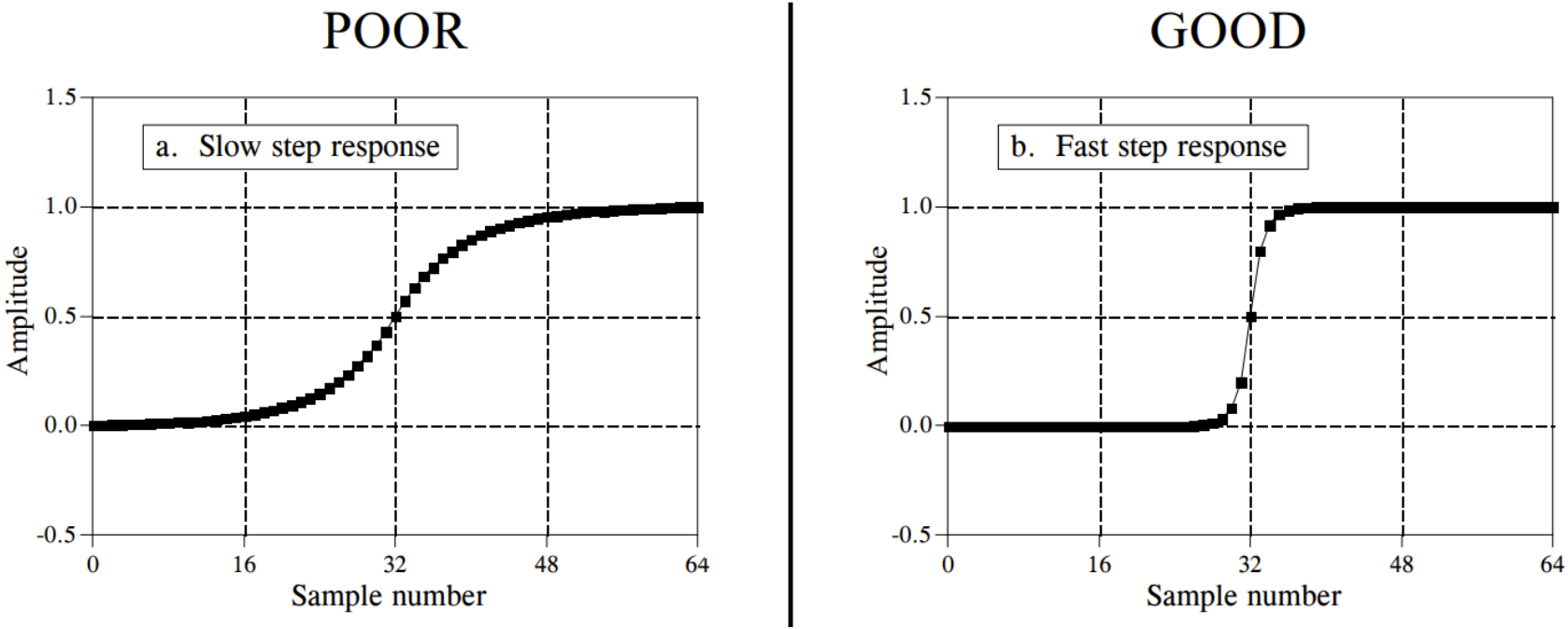

Filter Analysis – Step Response

Step Response Analysis – Overshoot

- Overshoot must generally be eliminated because it changes the amplitude of samples in the signal
- This is a basic distortion of the information contained in the time domain
- This can be summed up in one question: *Is the overshoot you observe in a signal coming from the thing you are trying to measure, or from the filter you have used?*

Filter Analysis – Step Response

Step Response Analysis - Overshoot

POOR

GOOD

Filter Analysis – Step Response

Step Response Analysis - Overshoot

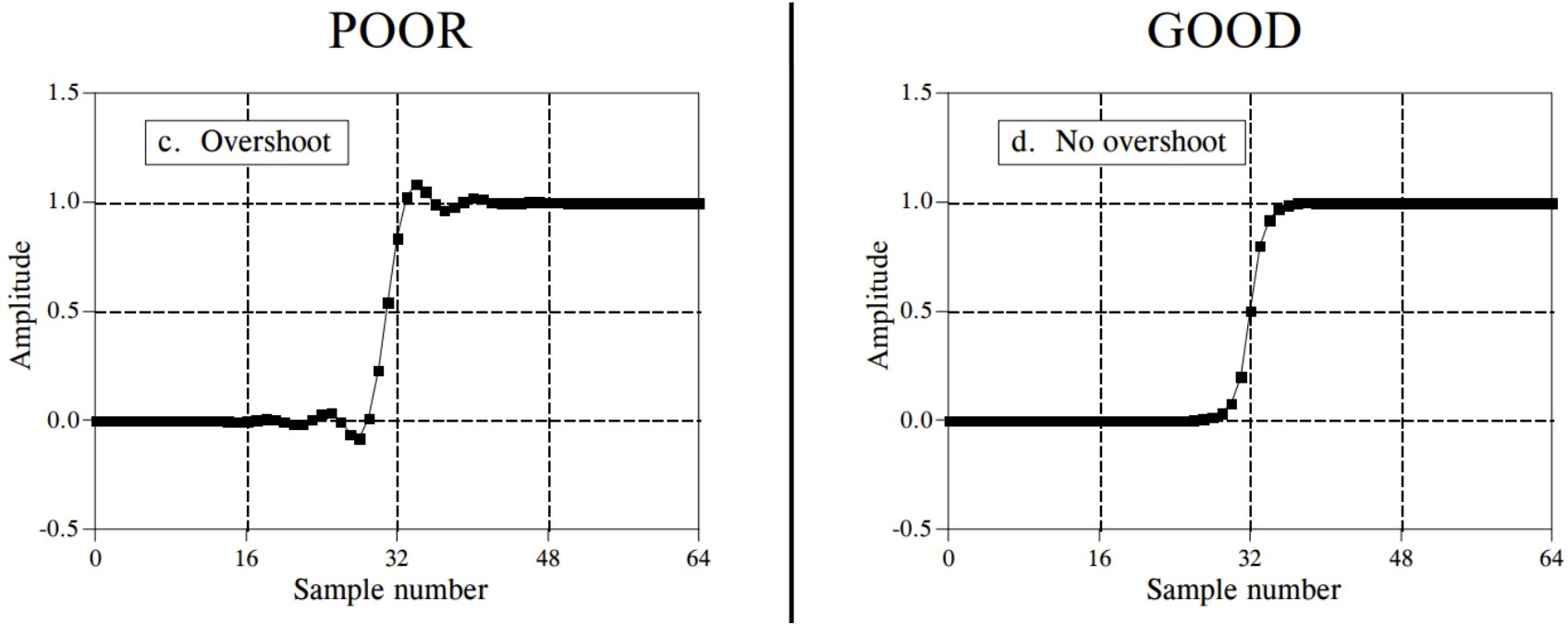

Filter Analysis – Step Response

Step Response Analysis – Phase Linearity

- It is often desired that the upper half of the step response be symmetrical with the lower half
- This symmetry is needed to make the rising edges look the same as the falling edges.
- This symmetry is called linear phase, because the corresponding frequency response has a phase that is a straight line

Filter Analysis – Step Response

Step Response Analysis – Phase Linearity

POOR

GOOD

Filter Analysis – Step Response

Step Response Analysis – Phase Linearity

POOR

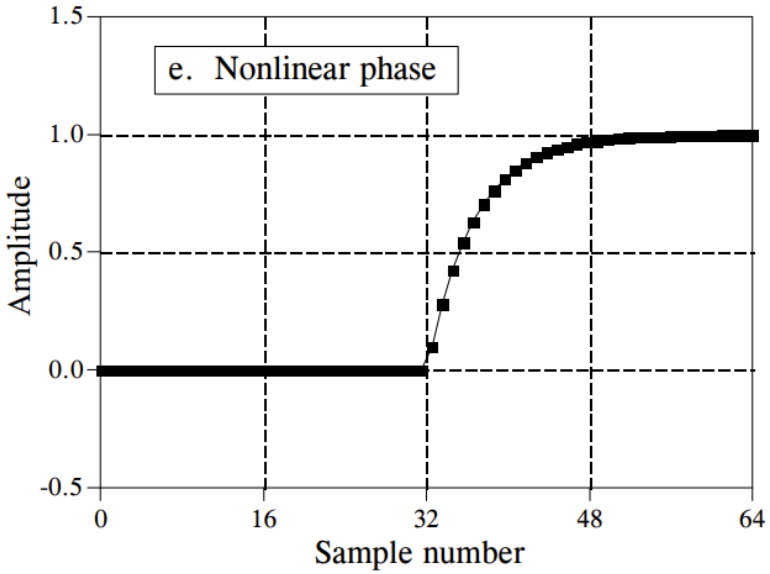

GOOD

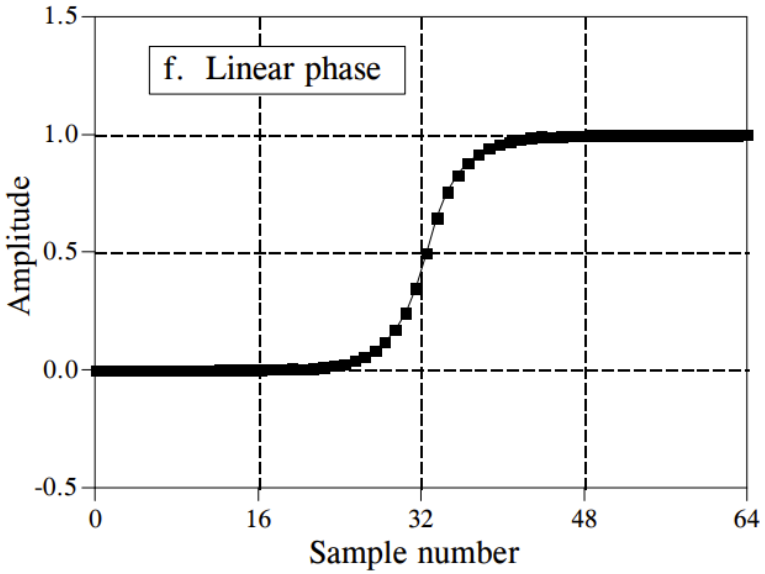

Lecture summary

- Digital filters are designed for:
  1. Signal separation
  2. Signal restoration
- Block diagrams display how filter operations are implemented
- Filters can be completely described by
  - ✓ Difference Equation
  - ✓ Transfer Function
  - ✓ Impulse Response
  - ✓ Step Response
  - ✓ Frequency Response

Lecture summary

- **Difference Equation** is the basis for deriving other representations of filters, including the block diagram
- **Transfer Function** helps to analyze the stability of filters
- **Impulse Response** shows how the filter respond to a short burst of input
- **Step Response** shows how the filter respond to sudden, sustained change in input. It has three parameters:
    1. Settling Time
    2. Overshoot
    3. Phase Linearity

Queen Mary
University of London